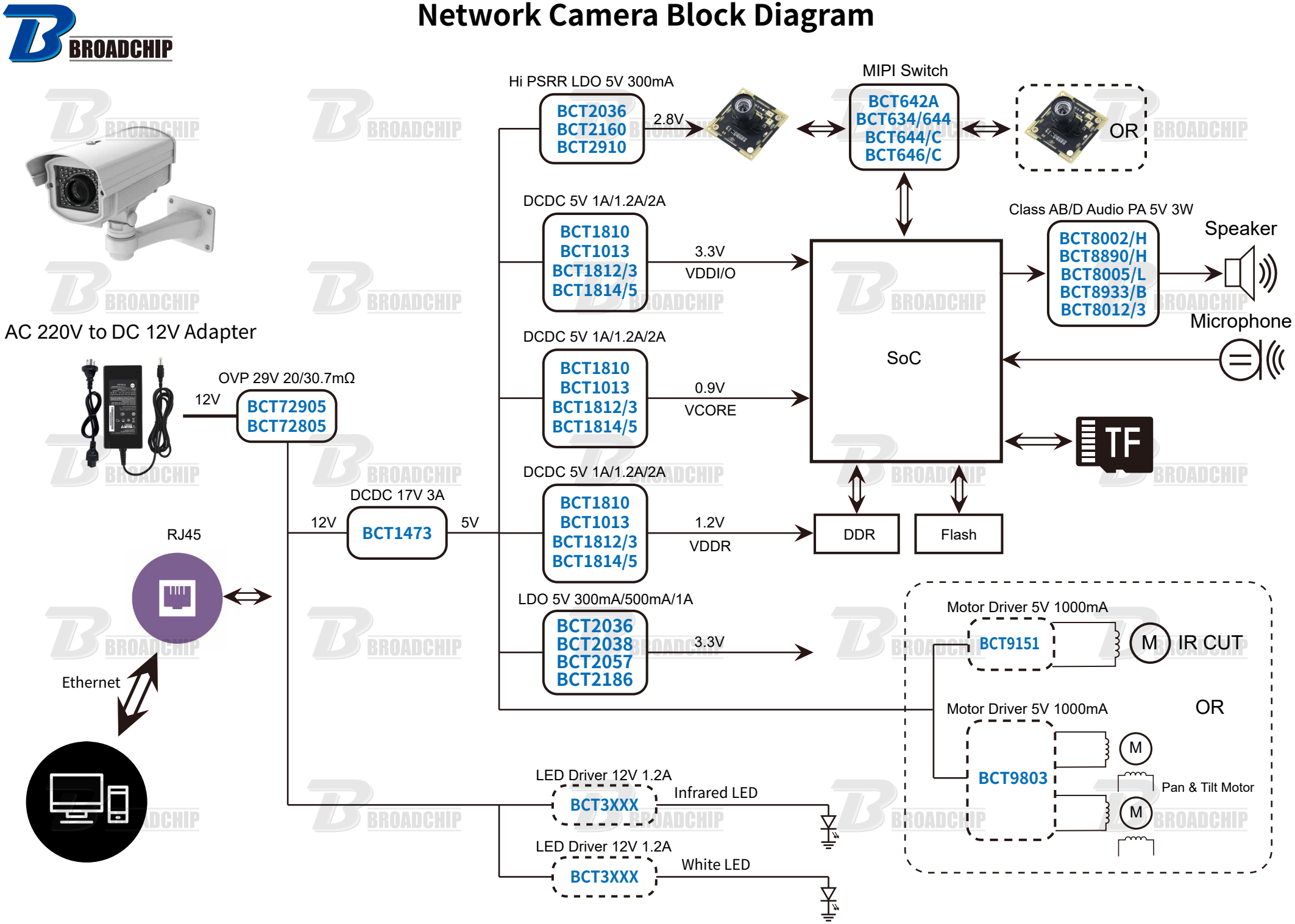Network Camera Block Diagram